NOSTOSARANA 1222-85

Zinc plating

Weight kg / piece 0,130
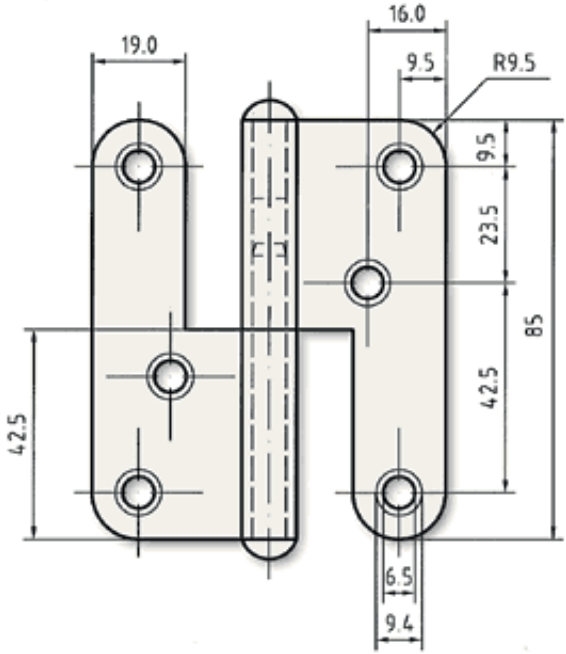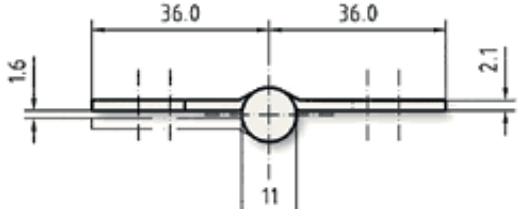
Screw Size 4,5x25